PRODUCT INTRODUCTION

ITEM	DESCRIPTION	
Upholstery	100% Acrylic ,100% Polyester and so on High quality fabric	
PP structure	Injection molded with multiple composite materials(PP),Anti-impact,Antiaging	
Foam	Molded foam.Density 55-60kgs/M^3 of seat,50-55kgs/M^3 of back	
Foot	2.0mm steel after precise pressing and welding	
Armrest top	Imported timber externally applied with polyester coating	
Leg panel	PP with fabric	
Writing table	Aluminium connector+Aluminium frame+2.0mm metal plate+18mm MDF	
CBM	0.136/seat	
Loading Qty/Seat	20GP	40HQ
	200	500
Package	KD	
Size/mm	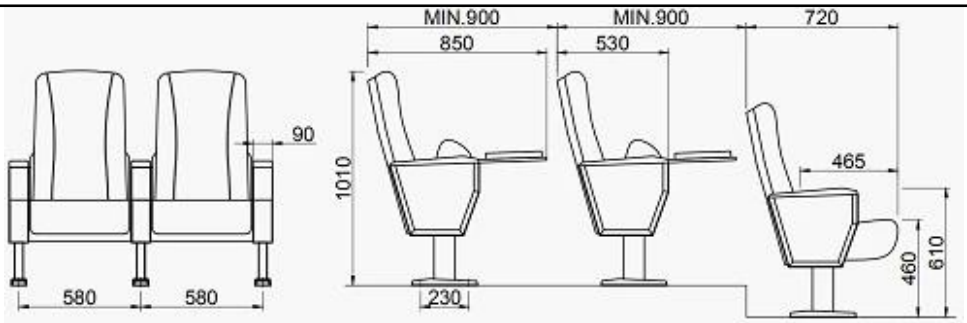	
Free Design	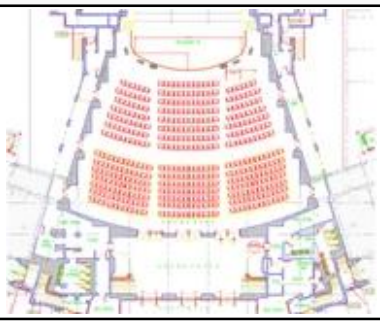 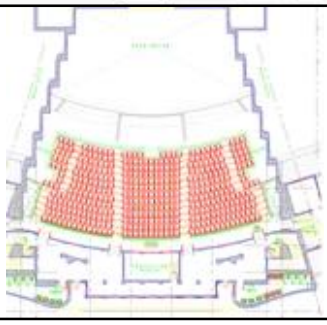	

PARTS REFERENCE

WORKSHOP

ENGINEERING CASE

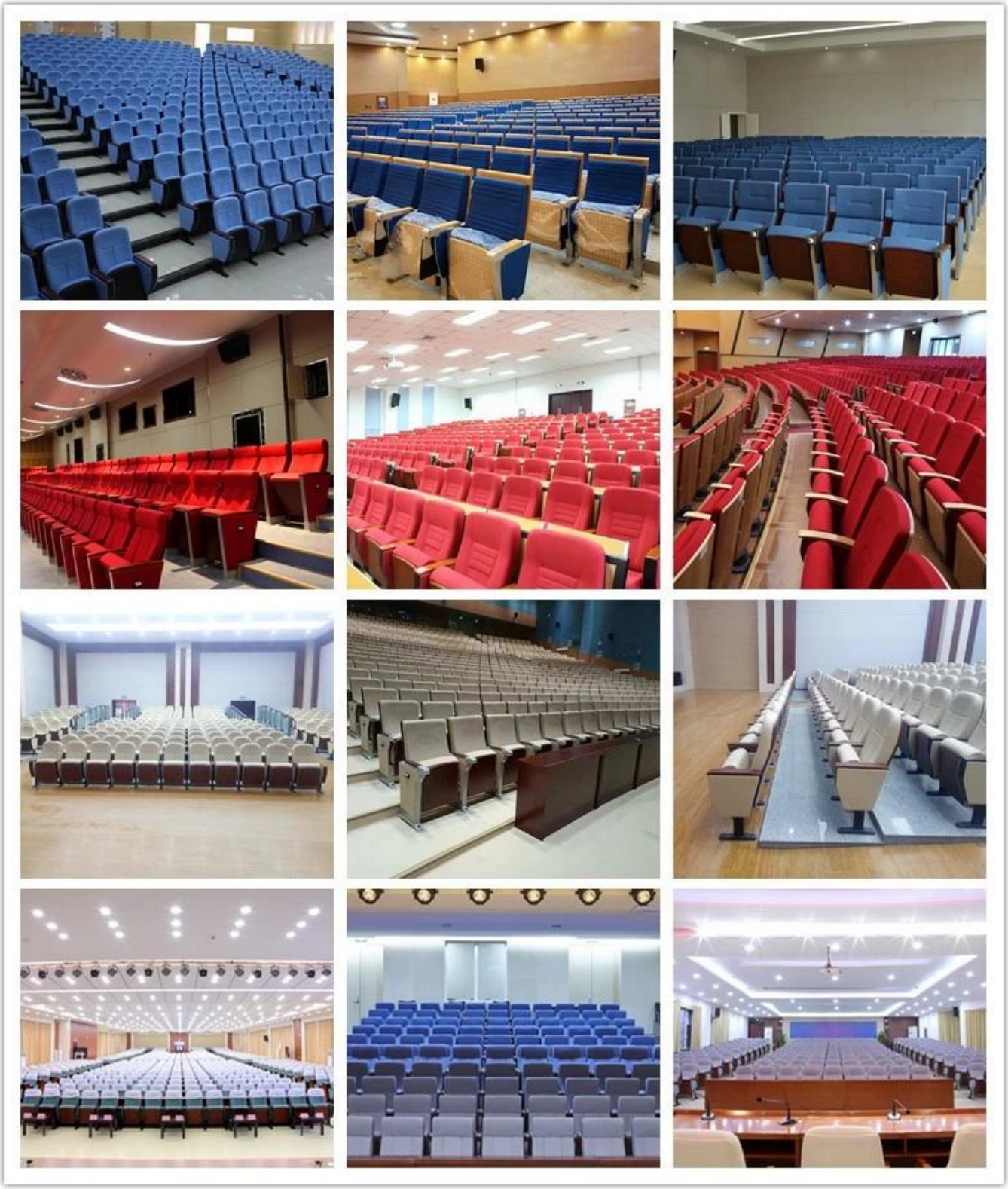

OUR PHOTOS

CERTIFICATE

SHIPPING

A. Depends on your qty and requirement of order ,

15-25 work days for 1*40HQ container, 15-35 days for 2*40HQ and so on.....

B. EX works, FOB shenzhen, CIF, C&F ,LC and so on,

delivery terms discuss with salesman.

OUR SERVICE

A. Own complete supply chain.

B. 100% quality guaranteed.

C. Reasonable price.

D. Products are in various style.

E. Good performance for delivery.

F. Adequate inventory(components).

Best after-sale service:If it appear any quality complaints and disputes,we will establish of product information feedback system,establish service files,responsible for the quality of the accident identified and deal with our client .

FAQ

Q1:Can we have your sample?

A:Sure.Sample are available for each model.They can be ready in 7-15days upon receipt of payment.

Q2:Can you give us discount?

A:Discount is negotiable for large quantity.

Q3:Can you give warranty of your products?

A:Yes,we extend a 100% satisfaction guarantee on all items.We may give the warranty 5 years.

Q4:Are you manufacturer or trading company?

A:We are professional manufacturer for more than 10 years in furniture industry.

Q5:How about the payment terms?

A:We accept advance T/T(30% deposit before produce, 70% balance before delivery),

other requirement pls discuss with salesman.
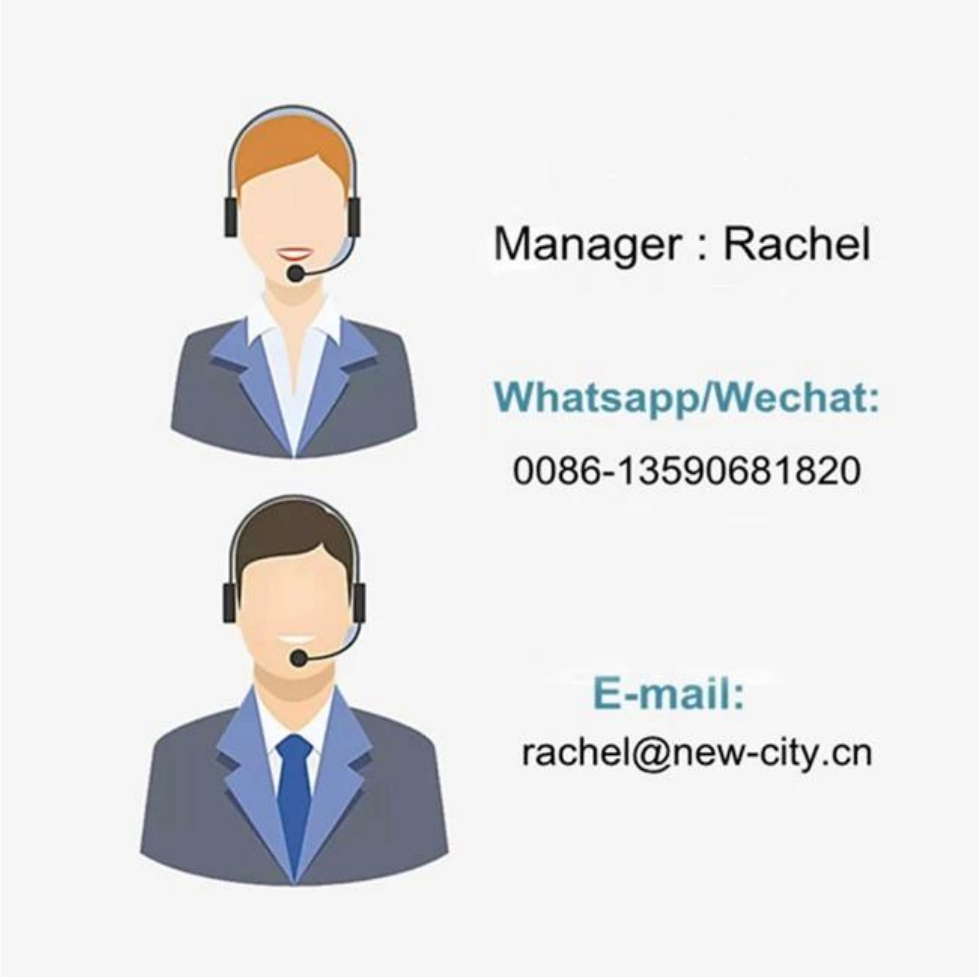
CONTACT US