PRODUCT INTRODUCTION

□□	□□	
□□	□□□□□	
PP□□	□□□□□□□□□PP□□□□□□□□□□□□□□	
□□	□□□□□□□□50-55kgs / M.^{3}□□□□□45-50kgs / M.^{3}	
□□	□□2.0mm□□□□□□□□	
□□□□	PP□□□□□	
□□	□□□□□	
□□□	0.17 /□	
□□□□/□	20GP	40HQ
	160	400
□□□□	□□	
□□/mm	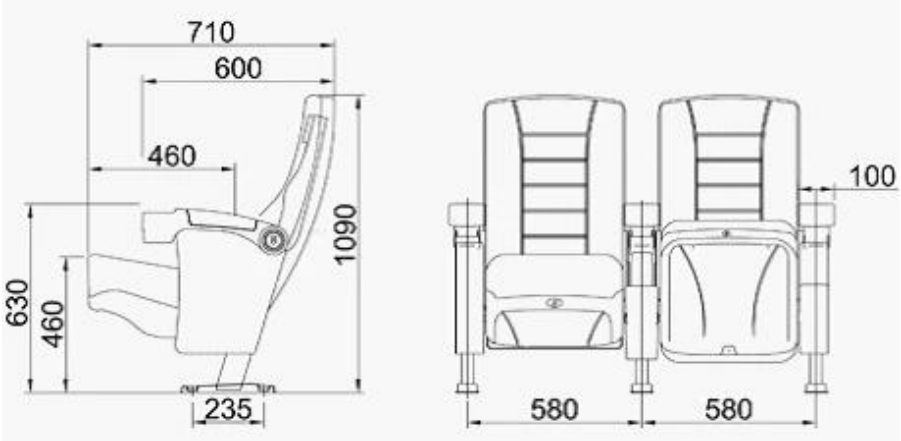	
□□□	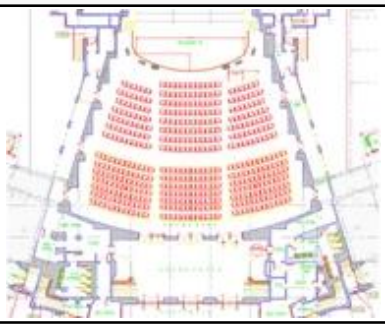 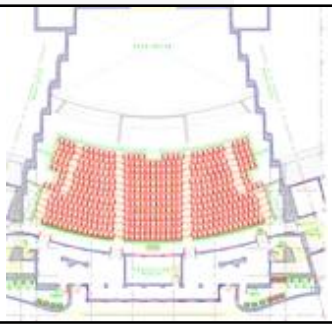	

WORKSHOP

ENGINEERING CASE

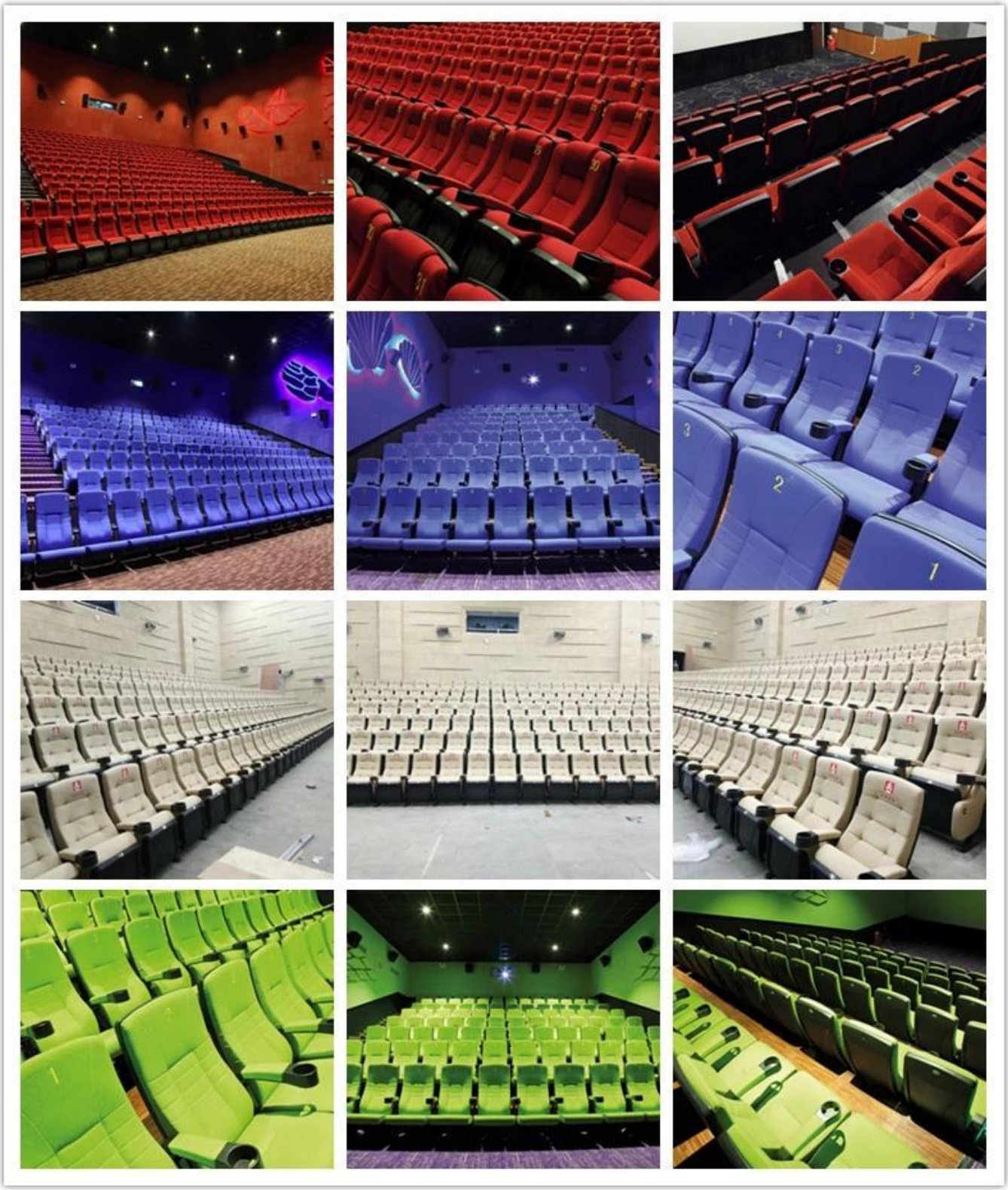

OUR PHOTOS

CERTIFICATE

ENVIRONMENTAL MANAGEMENT SYSTEM
CERTIFICATE OF CONFORMITY
FOSHAN KAITAI CHAIR CO.,LTD.
GB/T 24001—2004/ISO 14001:2004
OCCUPATIONAL HEALTH AND SAFETY MANAGEMENT
SYSTEM CERTIFICATE OF CONFORMITY
FOSHAN KAITAI CHAIR CO.,LTD.
QUALITY MANAGEMENT SYSTEM
CERTIFICATE OF CONFORMITY
FOSHAN KAITAI CHAIR CO.,LTD.
Photo Appendix:
Test sample
Product 1
Product 2
营业执照
(副本)
SGS
Test Report
FOSHAN KAITAI CHAIR CO.,LTD
NO.199,DONGTOU LU,LONGJIANG TOWN,SHUNDE DISTRICT,FOSHAN,GUANGDONG
Sample Description : STRECTYPES SPONGE
Sample Receiving Date : Jul.15, 2016
Test Performing Date : Jul.15, 2016 to Aug.16, 2016
Test Result Summary
CNAS
检验报告
Test Report
SGS
IAF

SHIPPING

A.□□□□□□□□□□□□□□□

1*40HQ□1□□□□□□□15-25□□□□□□2*40HQ□2□□□□□□□15-35□□□□□□□□□□□□

B.□□

OUR SERVICE

A.[illegible]

B.100%[illegible]

C.[illegible]

D.[illegible]

E.[illegible]

F.[illegible]

[illegible]

FAQ

[illegible]1[illegible]

[illegible]7-15[illegible]

[illegible]2[illegible]

[illegible]

[illegible]3[illegible]

[illegible]100[illegible]5[illegible]

[illegible]4[illegible]

[illegible]

[illegible]5[illegible]

[illegible]T/T[illegible]30[illegible]70[illegible]),[illegible]

CONTACT US

Manager : Rachel

Whatsapp/Wechat:

0086-13590681820

E-mail:

rachel@new-city.cn